S5247

2017-UP F250/F350, SUPER/CREW CAB, 6.2L&7.3L, RESONATOR-BACK, 4.0" SINGLE SIDE, STREET VERSION, SINGLE TIP

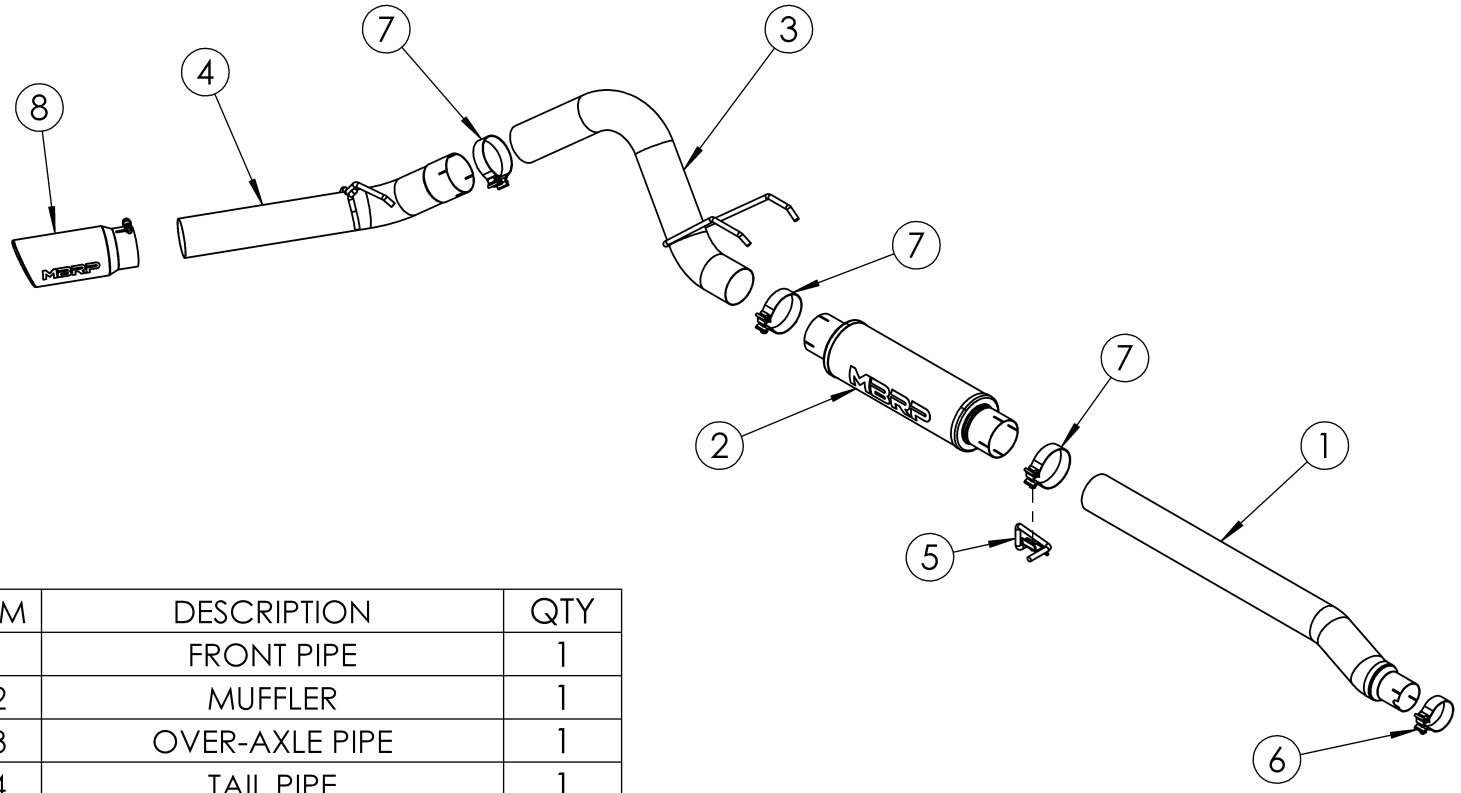

ITEM	DESCRIPTION	QTY
1	FRONT PIPE	1
2	MUFFLER	1
3	OVER-AXLE PIPE	1
4	TAIL PIPE	1
5	HANG TIGHT™ HANGER	1
6	3.0" CLAMP	1
7	4" BAND CLAMP	3
8	EXHAUST TIP	1

PLEASE READ BEFORE STARTING INSTALLATION

While MBRP has made every effort to ensure that all components of this system are of superior quality and properly packaged, it is the installer's responsibility to ensure the following before removal of the factory exhaust:

- that ALL components shown above are present.
- that ALL mating components fit together.
- that there are no damaged components.
- that the system you have purchased is appropriate for your vehicle year, model and configuration.
- that the system will not interfere with any modifications previously installed or planned.
- that you have read and understand these instructions.

If you have any questions or are uncertain about any aspect of the installation of this system to your vehicle please contact your dealer before commencing installation.

Figure 1

Figure 2

Figure 3

Figure 4

Removal of Stock System:

1. Apply a penetrating lubricant liberally to all exhaust fasteners, hangers and rubber insulators.

2. Loosen the clamp behind factory resonator.
Refer to Figure 1.

3. Remove the nuts from the stock hanger clamp.
Refer to Figure 2.

4. Remove the hangers from the rubber insulators and remove the exhaust from the vehicle.

Installation of MBRP Performance Exhaust:

1. Install the **Front Pipe** to the vehicle using the **3" Clamp** provided. **Refer to Figure 3.**

Note: the extension pipe may need to be cut.
Refer to the illustration below.

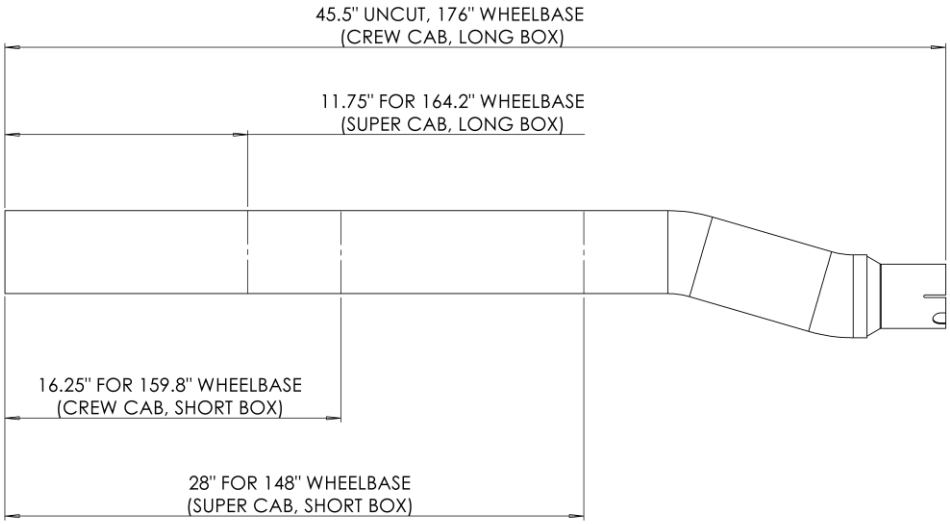

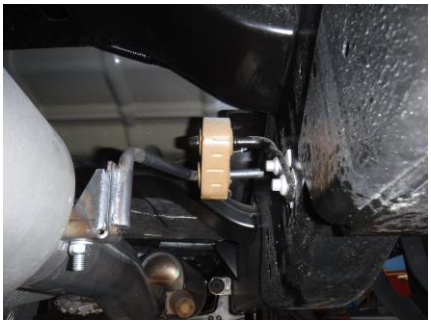

Figure 5

Figure 6

Figure 7

Figure 8

2. Install the **Hang Tight™ Hanger** onto a **4.0" Band Clamp** using the procedure shown below. Hang the **Hang Tight™ Hanger** in the factory rubber insulator. The insulator is located directedly beside where the front of the factory muffler was located. (Hanger bracket not exactly as shown)

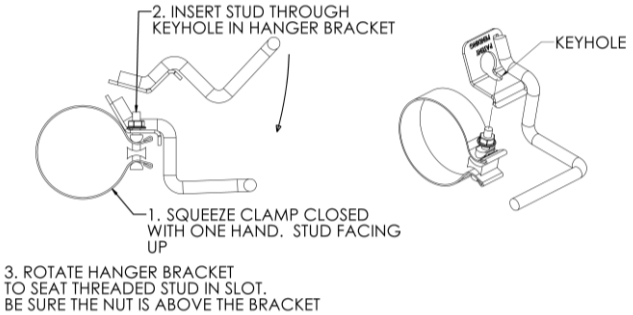

3. Install the **Muffler** onto the **Front Pipe** using the **Hang Tight™ Hanger** from step 2.
Refer to Figures 4 & 5.

4. Place the hangers of the **Over-Axle Pipe** into the existing rubber insulator. Loosely install the **Over-Axle Pipe** connecting it to the **Muffler** outlet and securing it with one of the **4" Clamps** provided.
Refer to Figure 6.

5. Place the hanger of the **Tail Pipe** into the existing rubber insulator. Loosely install the **Tail Pipe** connecting it to the **Over-Axle Pipe** and securing it with the remaining **4" Clamp**.

6. Install and adjust the **Exhaust Tip** to suit. Tighten the lock bolt on the **Exhaust Tip**.
Refer to Figure 7.

7. Carefully align the system and tips. Align the edge of each band clamp with the edge of the joint it is connecting. Tighten all hardware and clamps, starting at the front and working rearward to secure the system. Check along the full length of the exhaust system to ensure there is adequate clearance for fuel lines, vent lines, brake lines, frame, bodywork, suspension, and any wiring, etc. If there is any interference detected, relocate, or adjust to provide adequate clearance. Ensure all clamp connections are secure and components are unable to rotate or slide. Band clamps require approximately 45 lb-ft (60 N-m) of torque. Verify clearances, system security and band clamp torque after 30-60 miles (50-100 km) of driving.

Congratulations! You are ready to begin experiencing the improved power, sound and driving excitement of your MBRP performance exhaust system.

We know you will enjoy your purchase!