REBOUND PRO

OFF-ROAD PERFORMANCE MEETS ON-ROAD COMPLIANCE

Any hardcore off-road enthusiast knows the numerous benefits that lower tire pressures offer such as improved ride quality and a larger contact patch for increased traction. However, low pressures also increase the risk of de-beading the tire during extreme side loads or aggressive driving. **ICON** Alloys InnerLock technology allows for the usage of low air pressures while still being fully DOT compliant for the ultimate blend of on-road safety and off-road performance.

KEY FEATURES

- Engineered for DOT compliance.
- Patent pending InnerLock technology provides the ultimate blend of on-road safety and off-road performance, ideal for the "weekend warrior."
- Bead retention system features alloy pins that are removable, reusable, replaceable and do not require periodic re-torquing.
- Quick, easy, and safe tire installation and removal.
- Strategically placed hardware for maximum protection from trail damage.
- Compatible with a wide variety of tires without the need for any shims or special tools.

INNERLOCK TECHNOLOGY

Patent pending InnerLock technology is an all-new way of capturing the tire bead and retaining it onto the wheel. InnerLock uses a series of O-ring sealed, hardened alloy pins that are inserted radially on the inside of the tire bead to create a barrier that prevents the tire from unseating during extreme side loads. Additionally, InnerLock wheels are lightweight, strong, and are fully DOT compliant for the ultimate blend of on-road safety and off-road performance.

INNER TECHNOLOGY LOCK™
Patent Pending

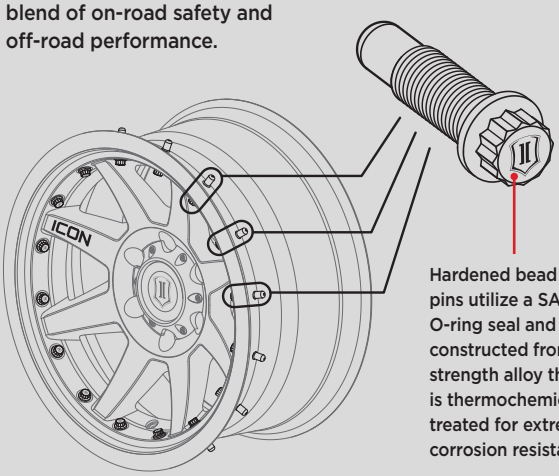

Hardened bead retention pins utilize a SAE J1926 O-ring seal and are constructed from high strength alloy that is thermochemically treated for extreme corrosion resistance.

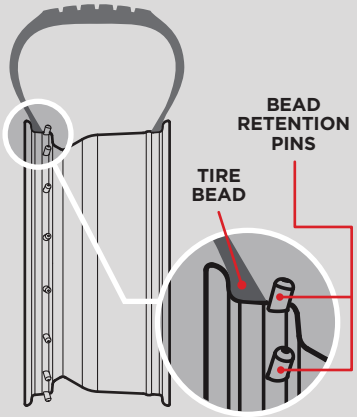

Innerlock Wheel Diagram

ICON ALLOYS™

www.iconvehicledynamics.com

REBOUND PRO

INSTALLATION

1 Inspect each pin to make sure it has an O-ring and that the threads are in good condition. Apply a light amount of anti-seize to the threads of each pin. Apply a small amount of oil to the O-ring of each pin. *[Figure 1]*

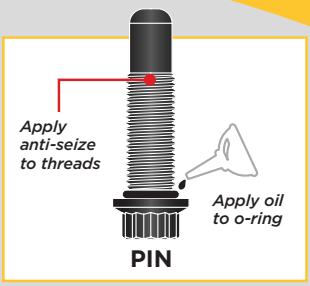

Fig.1

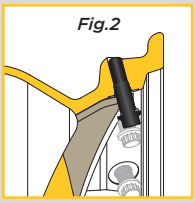

Fig.2

2 Carefully start the threads of each pin by hand until they are flush with the mounting surface of the wheel. These will simply act as a plug during the tire mounting process. Ensure that the pins are not protruding above the surface of the wheel bead hump. *[Figure 2]*

3 Mount the tire on the wheel per manufacturer specifications *[Figure 3]*. Do not fill the tire above 25 PSI while seating the beads. A good air supply is needed as some air will bypass the holes when seating the beads. After both the inner and outer tire beads are fully seated, deflate the tire fully by removing the valve core.

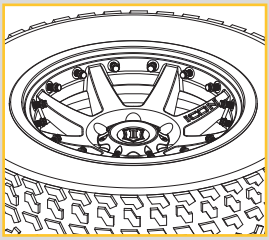

Fig.3

4 Using an air nozzle, blow out the O-ring seat of each hole in the wheel. This ensures that no debris will prevent the O-ring from sealing properly.

Fig.4

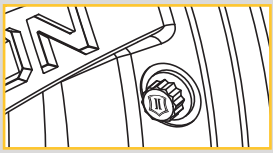

Fig.5

With the tire deflated, thread the pins all of the way in. [Torque to 20 ft-lbs using a 7/16" 12-PT] Check to make sure the head of the pin is contacting the wheel. *[Figure 4 & 5]*

Inflate tire to recommended pressure and balance as normal.

INNERLOCK WHEEL WARNINGS AND DISCLAIMER

WARNING: Serious injury or death may result from tire failure due to under-inflation, over-inflation, and/or over loading. Always adjust your tires to the proper inflation pressure (See tire information placard on your vehicle). Always inspect your tires for any signs of damage, uneven wear, and appropriate tread depth before driving.

WARNING: The end user must avoid long term operation of tires outfitted on Innerlock wheels at low pressures. Failure to do so may result in damage to the wheels, interference with the proper operation and performance of the tire and wheel combination and can cause or contribute to tire failure, loss of control, accidents and/or injuries up to and including death.

• Operation of tires at low pressures increases the ability of dirt and debris to migrate between the tire and wheel into the bead area. The end user is responsible for ensuring proper inspection and maintenance of the wheel and tire during use, including determining if excessive debris has compromised the junction between the tire and wheel and addressing the contamination.

• Operation of tires at low pressure increases the heat generated in the tire which can shorten tire life and increase the possibility of heat related tire failure. Never drive at speed on an under inflated tire.

• Operation of tires at low pressure can cause unstable handling characteristics at speed. Never drive at speed on an under inflated tire.

• Operation of tires at low pressure increases the deflection of the tire. Impacts with objects, even in the intended tread area, can more easily deflect the tire causing wheel contact, resulting in bending and damage to the wheel. Never drive at speed on an under inflated tire.

WARNING: Working on pressurized systems is an inherently dangerous activity and extreme caution should be used. Never remove or install retention pins when the tire is under pressure. Always use appropriate safety devices and protective gear when working with a tire under pressure.

WARNING: End users of these high-performance Innerlock wheels must ensure that they drive safely with due care and attention at all times. These high-performance Innerlock wheels will not correct errors of judgment in driving. Please consult your vehicle's owner's manual for more details about proper vehicle operation.

Scan the following QR code for access to product information, FAQ's, installation instructions, downloads, and more!

ICON ALLOYS™