BORLA PERFORMANCE INDUSTRIES
500 Borla Drive
Johnson City TN, 37604-7523
805-986-8600

Installation for Jeep Grand Cherokee SRT8 PNs 140632, 140632CB, 140633, 140633CB, 60634, 60635

******* Please compare the parts in the box with the bill of materials provided ***** to assure that you have all the parts necessary for this installation.**

These instructions have been written to help you with the installation of your Borla Performance Exhaust System. Please read this document completely before beginning the installation of your system.

To ensure this part number fits your specific model year, please visit our website for the latest model year listings at www.BORLA.com

Thank you for purchasing a Borla Performance Exhaust System.

Borla Performance Cat-Back™ Exhaust System PNs 140632, 140632CB, 140633, 140633CB are designed for the Jeep Grand Cherokee SRT-8 equipped with a 6.4L V8 engine, automatic or manual transmissions.

Borla Performance Front Muffler Section PNs 60634, 60635 are designed to replace the front mufflers of Borla Cat-Back™ Exhaust Systems 140632, 140632CB, 140633 & 140633CB only.

Borla Performance Industries recommends that an exhaust shop or professional after market parts installer, who has all the necessary equipment, tools and experienced personnel needed for proper installation, should perform the installation of this system. However, if you decide to perform the installation, we recommend someone should help you. Ensure the installer uses all under car safety precautions including eye protection.

Please take time to read and understand the following…

By installing your Borla Performance Exhaust System, you indicate that you have read this document and you agree with the terms stated below.

It is the responsibility of the purchaser to follow all installation instruction guidelines and safety procedures supplied with your Borla Performance Exhaust System.

Borla Performance Industries assumes no responsibility for damages occurring from misuse, abuse, improper installation, improper operation, lack of responsible care, or all previously stated reasons resulting from incompatibility with other manufacturer's products and/or systems.

Included with your Borla Performance Exhaust System is a warranty card. Please read it carefully before you begin any work on your vehicle. If you should have any questions regarding our warranty policy, installation, or any other matter pertaining to your new Borla Performance Exhaust System, please give us a call at the number provided on the warranty card.

Minimum Required Tool List:

TOOLS:

1. 3/8" Drive Ratchet
2. 3/8" Drive Extension 3"
3. 15mm Deep Well Socket
4. 13mm Socket
5. Pry Bar

SHOP SUPPLIES:

1 Spray Lubricant

Borla Performance - Bill of Materials

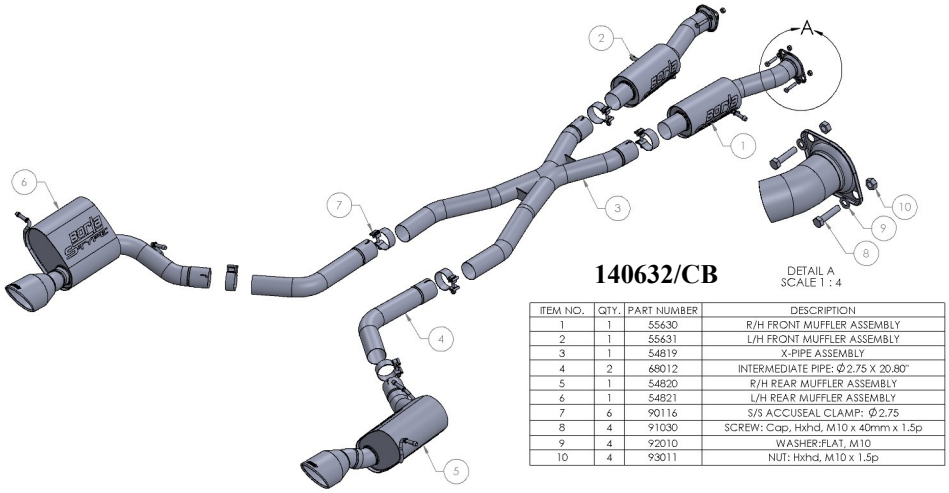

140632/CB

ITEM NO.	QTY.	PART NUMBER	DESCRIPTION
1	1	55630	R/H FRONT MUFFLER ASSEMBLY
2	1	55631	L/H FRONT MUFFLER ASSEMBLY
3	1	54819	X-PIPE ASSEMBLY
4	2	68012	INTERMEDIATE PIPE: Ø2.75 X 20.80"
5	1	54820	R/H REAR MUFFLER ASSEMBLY
6	1	54821	L/H REAR MUFFLER ASSEMBLY
7	6	90116	S/S ACCUSEAL CLAMP: Ø2.75
8	4	91030	SCREW: Cap, Hxhd, M10 x 40mm x 1.5p
9	4	92010	WASHER:FLAT, M10
10	4	93011	NUT: Hxhd, M10 x 1.5p

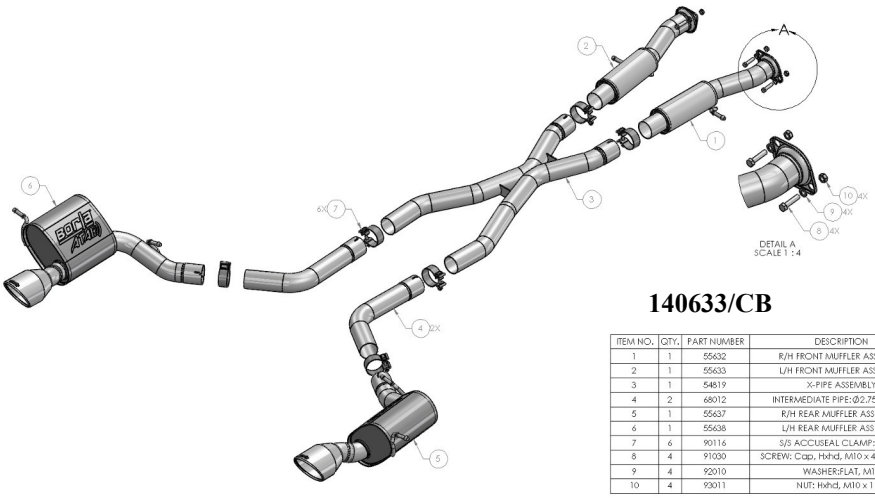

140633/CB

ITEM NO.	QTY.	PART NUMBER	DESCRIPTION
1	1	55632	R/H FRONT MUFFLER ASSEMBLY
2	1	55633	L/H FRONT MUFFLER ASSEMBLY
3	1	54819	X-PIPE ASSEMBLY
4	2	68012	INTERMEDIATE PIPE:Ø2.75 X 20.80"
5	1	55637	R/H REAR MUFFLER ASSEMBLY
6	1	55638	L/H REAR MUFFLER ASSEMBLY
7	6	90116	S/S ACCUSEAL CLAMP: Ø2.75
8	4	91030	SCREW: Cap, Hxhd, M10 x 40mm x 1.5p
9	4	92010	WASHER:FLAT, M10
10	4	93011	NUT: Hxhd, M10 x 1.5p

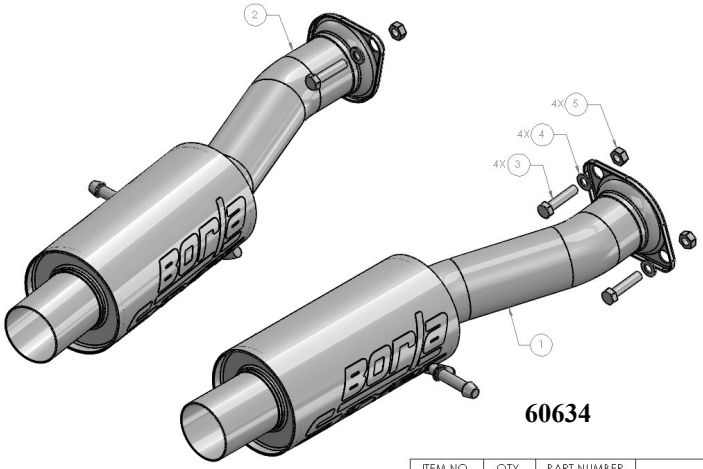

60634

ITEM NO.	QTY.	PART NUMBER	DESCRIPTION
1	1	55630	R/H FRONT MUFFLER ASSEMBLY
2	1	55631	L/H FRONT MUFFLER ASSEMBLY
3	4	91030	SCREW: Cap, Hxhd, M10 x 40mm x 1.5p
4	4	92010	WASHER:FLAT, M10
5	4	93011	NUT: Hxhd, M10 x 1.5p

Borla Performance Front Muffler Sections (PN's-60634, 60635) are designed to <u>replace Front Mufflers</u> of Borla Cat-Back™ Exhaust Systems 140632/CB & 140633/CB only.

*For ease of installation please remove **R/H and L/H Front Mufflers** and the **X-Pipe Assembly** from the vehicle.*
(Refer to page 6 of this manual)

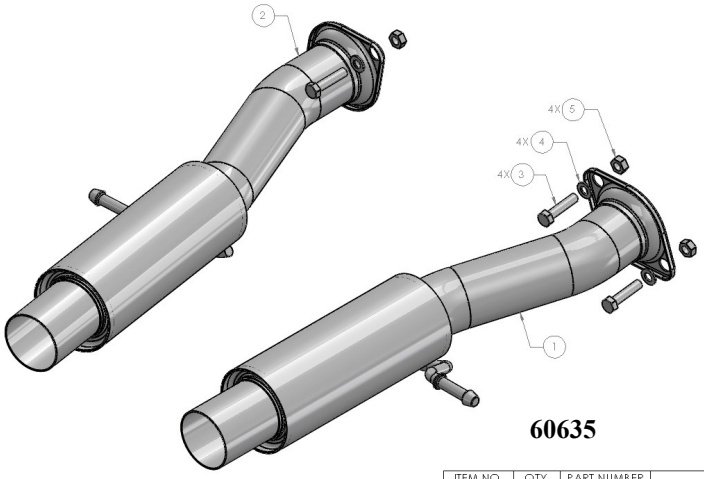

60635

ITEM NO.	QTY.	PART NUMBER	DESCRIPTION
1	1	55632	R/H FRONT MUFFLER ASSEMBLY
2	1	55633	L/H FRONT MUFFLER ASSEMBLY
3	4	91030	SCREW: Cap, Hxhd, M10 x 40mm x 1.5p
4	4	92010	WASHER:FLAT, M10
5	4	93011	NUT: Hxhd, M10 x 1.5p

Caution!!! Never work on a hot exhaust system. Serious injury in the form of burns can result If the vehicle has been in use and the exhaust system is hot, allow vehicle to cool for at least 1 hour. Always wear eye protection when working under any vehicle.

Note: It is our recommendation that you use a hoist or hydraulic lift to facilitate the installation of your new Borla Performance Exhaust System.

Taking all under car safety precautions, lift the vehicle using a hoist or hydraulic lift. Once this has been done, you may begin the removal of your old exhaust system from your vehicle.

Note: Before removing the original exhaust system from your vehicle, please compare the parts you have received with the bill of materials provided on the previous page to assure that you have all the parts necessary for the installation of your new Borla Performance Exhaust System.

Note: With a used vehicle, we suggest a penetrating spray lubricant to be applied liberally to all exhaust fasteners and allowing a significant period of time for the chemical to lubricate the threads before attempting to disassemble.

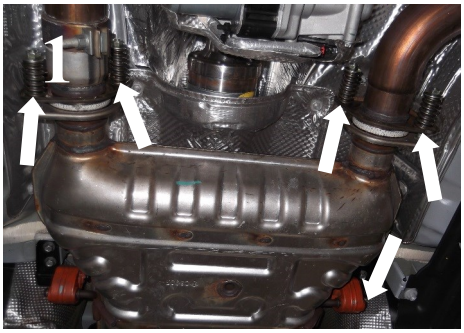

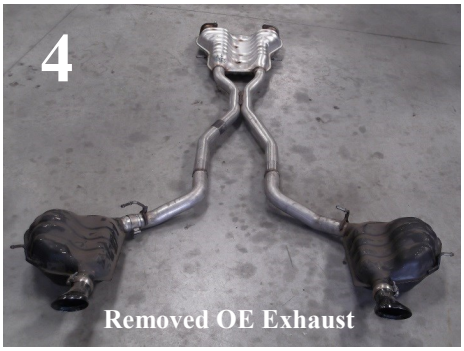

Original Exhaust System Removal

1. Lubricate all hangers, rubber isolators, bolts and nuts.
2. Loosen and remove nut, washer and spring on front flanges. Keep hardware for re-installation of your new exhaust system. (See Fig. 1)
3. Loosen the hardware on the left-rear muffler and carefully remove the muffler from the hangers. (See Fig. 2)
4. Remove (2) 13mm bolts from right side and left side and remove rubber isolator. Keep hardware for re-installation. (See Fig. 3)
5. Using a muffler stand or an additional person to hold the exhaust system in position, remove the hangers from the rubber isolators and remove the remaining exhaust system from the vehicle. (See Fig. 4)

BORLA PERFORMANCE INDUSTRIES
500 Borla Drive
Johnson City TN, 37604-7523
805-986-8600

Borla Performance Cat-Back ™ Exhaust System Installation

1. Orient components on floor referencing page-2 drawing.
2. Install **Left** and **Right Front Muffler Assembly** carefully inserting the hangers into the OE rubber isolators. Hand tighten the (4) flange bolts assemblies. (See Fig. 5 & 6)
3. Place a clamp over each expanded end of the **X-Pipe Assembly** and insert into outlets of installed **Front Muffler Assemblies**. Do not tighten the clamps.
4. Place a clamp over the expanded ends of the **Intermediate Pipe Assemblies** and insert into outlets of installed **X-Pipe Assembly**. (See Fig. 6) Do not tighten the clamps.
5. Place a clamp over the expanded ends of the **L/H** and **R/H Rear Muffler Assemblies** and insert into outlets of installed **Intermediate Pipe Assembly.** Insert hangers into the rubber isolators. (See Fig. 7) Do Not tighten the clamps.
6. Check your exhaust system for proper clearance under the vehicle and also for tip alignment. Starting at front flanges and moving to rear of vehicle, tighten flange hardware bolts. Orient position of bolt (on supplied clamps) between (not over) pipe notches and tighten to 35 ft. lbs. torque.
7. Align tips and tighten hardware. Loosen clamps to rotate or slide pipe for better alignment. (See Fig. 8)
8. Before starting your vehicle, make sure to check all wires, hoses, brake lines, body parts and tires for safe clearance from the exhaust system.
9. Start vehicle and check for any leaks. If any leaks are found, determine cause (such as loose or incorrectly positioned clamp) and repair as necessary.

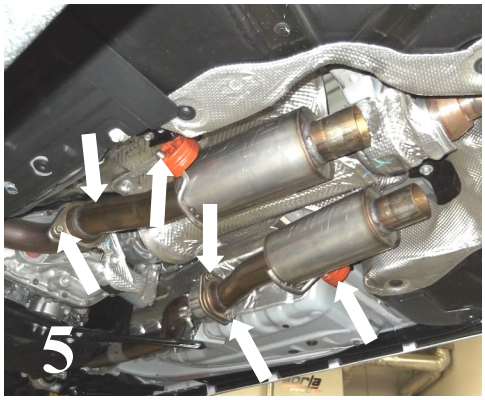

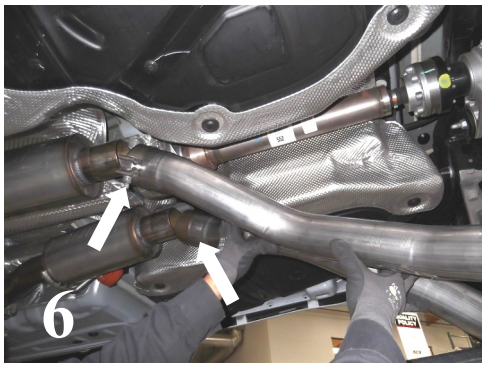

***WARNING:** Use extreme caution during installation. Torque all fasteners according to manufacturer's torque values and tightening sequence. DO NOT use air impact tools to tighten fasteners on Borla Performance Exhaust Systems. Use of such tools may result in bent flanges or gasket contact areas leading to exhaust leaks.*

NOTE: When you first start your vehicle after the installation of your new Borla Performance Exhaust System, there may be some smoke and fumes coming from the system. This is a protective oil based coating used in the manufacturing of mandrel bent performance exhaust tubing. This is not a problem and will disappear within a very short period of time after the exhaust has reached normal operating temperatures.

BORLA PERFORMANCE INDUSTRIES
500 Borla Drive
Johnson City TN, 37604-7523
805-986-8600

Borla Performance Front Muffler Section
(60634 & 60635)
System Installation

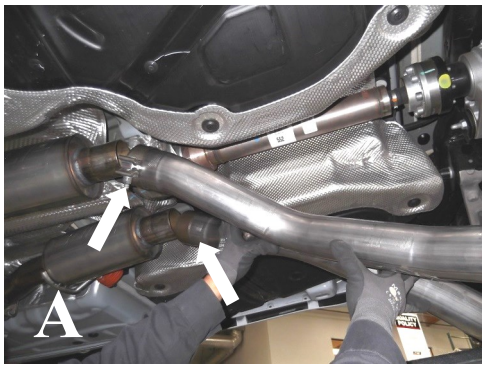

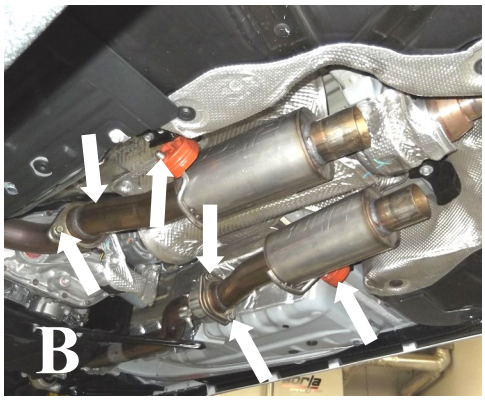

A. Orient components on floor referencing page-2 drawing.

B. Loosen (4) clamps of the **X-Pipe Assembly.** Slide the clamp away from the pipe notches and. Use a rubber mallet to tap and loosen the pipes. Slide the **X-Pipe Assembly** rearwards removing the inlet from the (installed) **Front Muffler Assemblies.** (See Fig. A)

C. Loosen and remove the bolts on the flanges of each **Front Muffler Assembly.** Remove hangers from rubber isolators and remove both **Front Muffler Assemblies** from vehicle. (See Fig. B)

D. **Install (60634 or 60635) Left** & **Right Front Muffler Assembly** carefully inserting the hangers into the OE rubber isolators. Hand tighten the (4) flange bolts assemblies with provided hardware.

E. Insert inlets of the **X-Pipe Assembly** into outlets of installed **Front Muffler Assemblies.** Slide and return the clamps over each expanded end of the **X-Pipe Assembly**. Do not tighten the clamps.

F. Check your exhaust system for proper clearance under the vehicle and also for tip alignment. Starting at front flanges and moving to rear of vehicle, tighten flange hardware bolts. Orient position of bolt (on supplied clamps) between (not over) pipe notches and tighten to 35 ft. lbs. torque. (See Fig. C)

G. Before starting your vehicle, make sure to check all wires, hoses, brake lines, body parts and tires for safe clearance from the exhaust system.

H. Start vehicle and check for any leaks. If any leaks are found, determine cause (such as loose or incorrectly positioned clamp) and repair as necessary.

WARNING: Use extreme caution during installation. Torque all fasteners according to manufacturer's torque values and tightening sequence. DO NOT use air impact tools to tighten fasteners on Borla Performance Exhaust Systems. Use of such tools may result in bent flanges or gasket contact areas leading to exhaust leaks.

NOTE: When you first start your vehicle after the installation of your new Borla Performance Exhaust System, there may be some smoke and fumes coming from the system. This is a protective oil based coating used in the manufacturing of mandrel bent performance exhaust tubing. This is not a problem and will disappear within a very short period of time after the exhaust has reached normal operating temperatures.