Exhaust Installation Tips

****Universal suggested procedures for installation. Each specific application may vary****

Slip Joints

- If the system isn't fitting just right, measure the depth of each expansion (slip joint) and make sure that the mating tube is slipping inside the expansion the same distance.
- The slip joint is designed to be a tight fit as to prevent any exhaust leaks. Installation may require some extra effort to fully seat the mating tube into the expansion. Seek assistance if you cannot fully seat the tubes in the slip joint.

EXHAUST SYSTEMS ARE DESIGNED TO HAVE SOME TOLERANCE BETWEEN BOTTOM OF EXPANSION AND END OF TUBE. SLIP JOINT CAN BE SHALLOWER THAN FULL DEPTH TO ADJUST FITMENT IF NEEDED

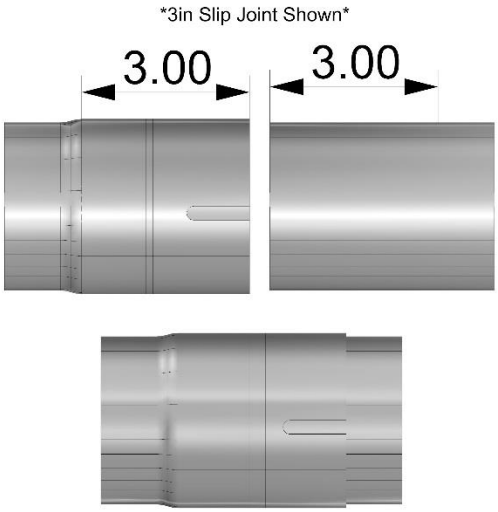

Exhaust Hangers

- Exhaust hangers are generally designed with the welded portion wrapping around the bottom side of the tube. For connection pipes and others with only an exhaust hanger as the defining element, keep in mind the orientation of the exhaust hanger relative to the tube.
- The portion of the exhaust hanger that is attached to the rubber isolator on the vehicle (if applicable) is generally designed to be perpendicular with the length of the isolator. In most cases, the end that protrudes from the isolator will be horizontal to nearby elements such as a frame rail or body line.
- When installing a system onto a vehicle, it is suggested that the rubber isolator be lubricated lightly with a thin spray lubricant such as WD-40 or a silicon aerosol spray.

Torca/Ball & Socket Connections

- Torca connections should be installed as straight as possible: the flared end of the tube should be parallel with the shoulder on the balled end of the tube. There should be roughly a 3/8” gap between the flared end and shoulder on the balled end.
- Ball & Socket connections should be installed as straight as possible. When bolted together, the (x2) 2 bolt flanges should be parallel with one another and perpendicular to the length of the tube.

3in Torca Ball/Flare Shown

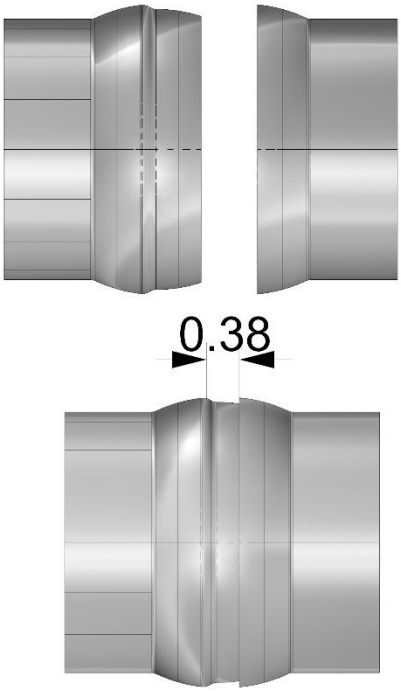
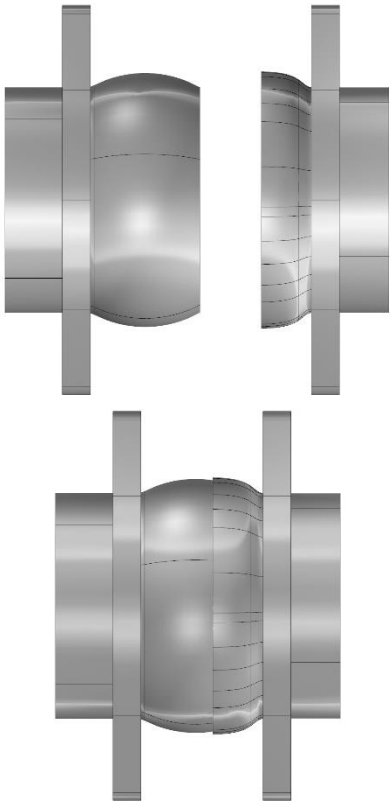
3in Ball & Socket Connection Shown