CORSA®
PERFORMANCE EXHAUSTS

IMPORTANT WARRANTY & INSTALLATION INSTRUCTIONS ATTACHED

Please Forward All Attached Information to Consumer
Warranty Not Valid Unless Returned to CORSA Exhaust

We ask that you take a few moments to complete our warranty registration form:

TO ACTIVATE YOUR LIMITED LIFETIME WARRANTY GO TO:

CORSAPERFORMANCE.COM/WARRANTY

For Full-Color Installation Instructions, Please Visit:

CORSAPERFORMANCE.COM and Search by Part Number

Please be sure to review the enclosed instructions prior to beginning the installation process. If you have any questions about the enclosed parts, instructions or encounter a problem during Installation: **CALL CORSA PERFORMANCE TECHNICAL ASSISTANCE AT 800.486.0999**

Exhaust System Installation
Cat-Back Exhaust System
Single Side Exit w/ Twin 4.0" Pro-Series Tips
2007-09 6.2L Cadillac Escalade EXT & ESV
SPORT PN 14298 / TOURING PN 14299
2007-09 6.2L GMC Yukon Denali XL
SPORT PN 14512 / TOURING PN 14513

Please take time to read and understand these installation instructions.

CORSA recommends that installation of this system be performed by a qualified service center or professional muffler installer who has the necessary equipment, tools and experienced personnel. However, if you decide to perform this install, the use of a hoist and an additional person will be required.

CAUTION: Never work on a hot exhaust system. Allow time for the vehicle to cool. Always wear eye protection when working under a vehicle.

Please confirm that all parts are present before beginning the factory exhaust system removal and CORSA exhaust system installation.

Bill of Materials:

- Head Pipe Assembly (15CE4029)
- Touring Muffler 14633 or Sport Muffler 14635
- Tailpipe Assembly (15CE4033)
- Twin 4.0" Pro-Series Tip Assembly (16TA3000)
- Hardware Kit (16TA7005)
- (1) Packet Anti-Seize Lubricant

Recommended Tools:

- Safety Glasses
- Small flat head screw driver
- 15mm socket and ratchet
- Chain style pipe cutter or reciprocating saw
- Grommet pullers
- Spare tire removal kit
- Soapy water
- Torque wrench

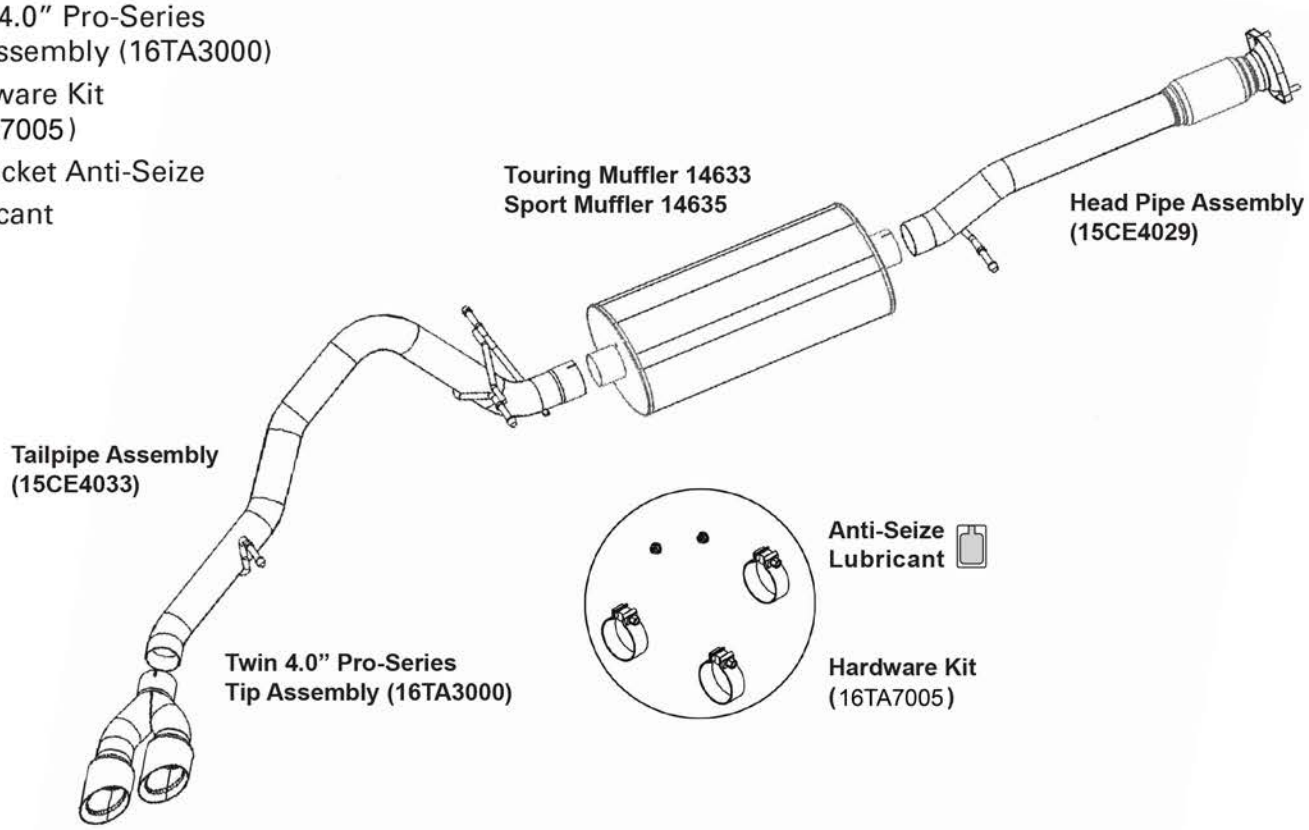

Removal of Stock System:

1) Use a small flat head screw driver to pry off the spare tire mechanism cover plate in the rear bumper. This may be behind the hitch cover which is removed with two thumb screws at bottom. Insert the ignition key to remove the locking mechanism to gain access to the spare tire removal system. **(See Fig’s A & B)**

2) Use the spare tire removal kit from your vehicle and place the square end into the spare tire removal shaft then turn the wrench counter clock wise to lower the spare tire. **(See Fig’s C, D & E)**

3) Remove the heat shield using a 15mm socket and ratchet. **(See Fig’s F, G & H)**

4) Mark tailpipe 3.25” rearward of the 2nd hanger after main tunnel muffler. Place a chain style cutter around the tailpipe at mark and cut the tailpipe at this location. **(See Fig. I & J)**
A reciprocating saw may also be used.

5) Remove the rearmost hanger from the grommet using grommet pullers or similar device. **(See Fig’s K)**

NOTE: IMPORTANT: Make sure that the small drain or weep hole in muffler faces down when muffler is installed.

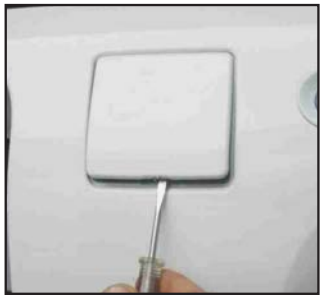

FIG. A

FIG. B

FIG. C

FIG. D

FIG. E

FIG. F

FIG. G

FIG. H

FIG. I

FIG. J

FIG. K

6) Remove the tailpipe section from the vehicle by lifting the tailpipe over the rear axle and backwards under the rear bumper. Be sure to move the rear differential vent hose out of the way when performing this operation. **(See Fig. L)**

7) Use a 15mm socket and ratchet to remove the flange nuts at the flange connection of the head-pipe. Then remove the hanger at the headpipe location and the hangers after the muffler. Remove the tunnel muffler section away from the vehicle. This completes the removal of the stock system. **(See Fig’s M, N, O & P)**

FIG. L

FIG. M

FIG. N

FIG. O

FIG. P

Technical Assistance: Call 800.486.0999.

Installation of CORSA Exhaust System:

NOTE: Apply the anti-seize lubricant (supplied) to the threads ONLY of all the clamps and flange bolts. Failure to follow this procedure can cause nuts to seize on clamps and potentially destroy threads. After applying anti-seize lubricant, be sure to thoroughly clean hands as lubricant will tarnish stainless steel. All clamps should be tightened using a properly calibrated Torque Wrench. Using an air impact gun will damage the clamp and reduce its ability to effectively seal the joint. It may also cause the joint to separate thereby causing damage to your exhaust system and your vehicle.

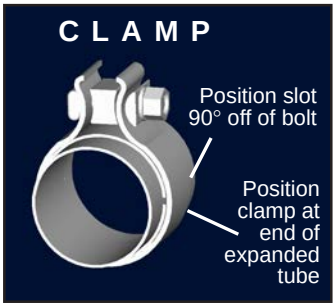

CONTINUE TO STEP 1 OF THE INSTALLATION PROCESS ON PAGE 4.

1) Locate the CORSA Head Pipe assembly and slide the flange studs into the factory flange. Use the nuts supplied with the CORSA hardware kit and evenly tighten down to **45 Ft-lbs.** Insert the hanger in to the factory grommet. **(See Fig's Q, R & S)**
Note: Using a soapy solution on the grommet hole will make the job easier.

2) Slide a supplied 3" TORCA clamp over the inlet of the CORSA muffler. Make sure the drain hole is facing down. Slide the muffler onto the Head Pipe and pre-tighten the clamp.
(See Fig's T, U and V)

3) Slide a supplied 3" TORCA clamp over the inlet of the CORSA Tailpipe. From the rear of the vehicle slide the pipe over the axle while holding the rear differential vent hose out of the way. Insert the pipe over the muffler exit and place the hangers into the factory grommets.
(See Fig's W, X, Y, Z, AA and BB)
Note: Using a soapy solution on the grommet hole will make the job easier.

FIG. Q

FIG. R

FIG. S

FIG. T

FIG. U

FIG. V

FIG. W

FIG. X

FIG. Y

FIG. Z

FIG. AA

FIG. BB

4) Replace the heat shield using a 15mm socket and ratchet. **(See Fig. CC)**

5) Slide a 3” TORCA clamp over the tip assembly and place the tip onto the end of the tailpipe. Pre-tighten the clamp at this time. **(See Fig’s DD, EE, and FF)**

6) Starting from the front of the CORSA exhaust system tighten all TORCA clamps to **45 ft-lbs** using a torque wrench.

7) Replace the spare tire to the pre-removal condition. Replace the bumper cover plate after inserting the locking mechanism back in place.

8) **It is strongly suggested that all clamps be checked and tightened after road testing the vehicle once the system has cooled.**

FIG. CC

FIG. DD

FIG. EE

FIG. FF

NOTE: During cold weather start-ups, you may experience an exhaust sound that is deeper and louder in tone than usual. This is temporary and will diminish to normal levels once your engine has reached its normal operating temperature.

NOTE: Immediately following the installation of your CORSA exhaust system, you may experience a trace of smoke after initial start-up. DO NOT be alarmed. The smoke is caused by the burning of a small amount of forming oil residue used in the manufacturing process.

If you have any questions about the installation process, call CORSA Performance and ask one of our Sales & Technical Service Representatives. Do not attempt to make any modifications to parts as this will void your warranty.

CORSA Performance • 140 Blaze Industrial Parkway • Berea, Ohio 44017-2930 • **P. 800.486.0999** • F. 440.891.1868
E-mail: sales@corsaperformance.com • www.corsaperformance.com